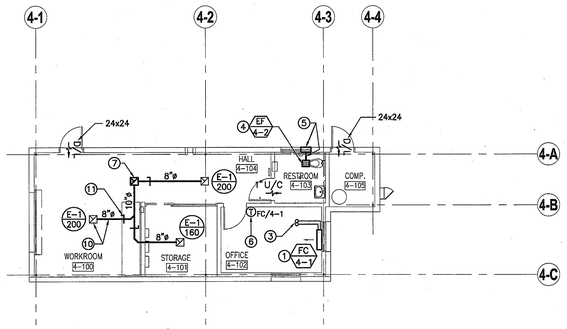

BUILDING 4 - MECHANICAL FLOOR PLAN

SCALE: 1/8"=1'-0" | 1

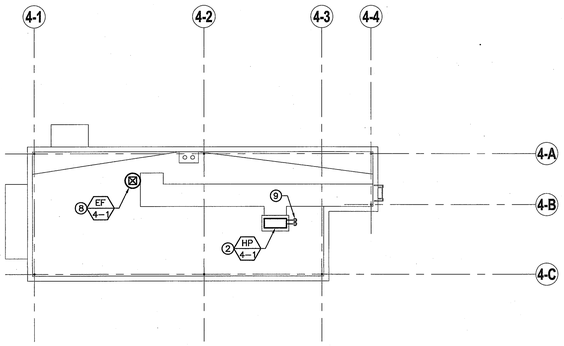

BUILDING 4 - MECHANICAL ROOF PLAN

SCALE: 1/8"=1'-0" | 3

KEYNOTES

1. WALL MOUNTED DX FAN COIL UNIT. INSTALL AS HIGH AS PRACTICAL. SEE DETAIL 4/M-3.2. PROVIDE CONDENSATE DRAIN PIPE PER PLUMBING DRAWING.
2. HEAT PUMP ON PLATFORM. SEE DETAIL 10/M-3.2.
3. ¼" LIQUID AND INSULATED ½" SUCTION PIPING UP THRU ROOF.
4. CEILING MOUNTED EXHAUST FAN. SEE DETAIL 5/M-3.1 SIM.
5. 8"ø EXHAUST AIR DUCT AND 16"x8" WALL LOUVER. PROVIDE DUCT TRANSITION AS REQUIRED.
6. THERMOSTAT ON WALL.
7. 12"x12" EXHAUST AIR DUCT UP THRU ROOF.
8. EXHAUST FAN ON ROOF CURB. SEE DETAIL 9/M-3.1
9. ¼" LIQUID AND INSULATED ½" SUCTION PIPING DOWN THRU ROOF.
10. EXHAUST GRILLE AND DUCT (TYP.)
11. MANUAL VOLUME DAMPER (TYP.)

KEY PLAN

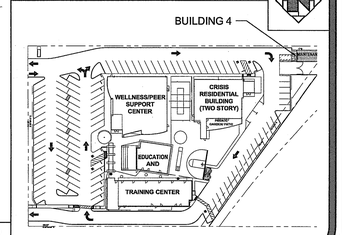

County of Orange

OC PUBLIC WORKS

Architecture & Engineering

Revisions

Sym.	Descrip.	Date	By

0742

Consultants

FTA ARCHITECTS
Thomas Cannon Gray, suite 100
Irvine, California 92618
TEL: 714-855-0344
FAX: 714-855-0346
Job Number 0444

Drawn ML | Chkd. | Date 11-25-09

A-E Seal

A-E ALEXANDER + HIBBS, AIA, INC.

ALEXANDER + HIBBS, AIA, INC.
Architecture and Planning
1111 E. Lexington Ave. #
Pomona, California 91767
(909) 620-0808

Design | Chkd. | Date Nov. 26, 2009

Sht Title BLDG 4 - MECHANICAL FLOOR & ROOF PLANS

Project COUNTY OF ORANGE HEALTH CARE AGENCY
401 SOUTH TUSTIN STREET

401 SOUTH TUSTIN STREET
ORANGE, CA 92866

PROJ. NO. 100-042-P210-4200

Plan No. 52333-03608

Sheet M-2.4.1

0742 COUNTY OF ORANGE HEALTH CARE AGENCY 401 SOUTH TUSTIN STREET