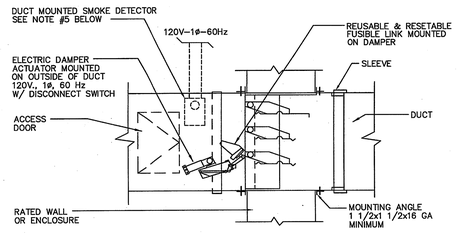

NOTES:

1. INSTALL THE DAMPER ACCORDING TO MANUFACTURERS INSTALLATION REQUIREMENTS, SMACNA, NFPA 90A AND APPLICABLE LOCAL CODES.
2. CALIFORNIA STATE FIRE MARSHAL LISTED 3225–368:110 (FIRE);03230–0368:111 (SMOKE);UL LISTING 555 & 555S, LEAKAGE CLASS ii, UL FILE NO. R–11767 (POTTORFF MODEL FSD–142 WITH FACTORY DISCONNECT SWITCH).
3. DAMPER DETAIL FOR REFERENCE ONLY. DAMPERS SHALL BE STATE FIRE MARSHAL APPROVED AND INSTALLED STRICTLY PER MANUFACTURER'S PRINTED INSTRUCTIONS. MANUFACTURER'S INSTALLATION INSTRUCTIONS SHALL BE MADE AVAILABLE TO THE INSPECTING AUTHORITIES.
4. DAMPERS TO BE INSTALLED IN DUCT PENETRATIONS THROUGH PROTECTIVE ELEMENTS OF FIRE–RATED CORRIDORS. SUCH DAMPERS SHALL BE COMBINATION FIRE/SMOKE DAMPERS CONFORMING TO C.B.C. STANDARDS PER SECTION 703.4 AND CH. 35, PART 4 WITH A MINIMUM LEAKAGE CLASSIFICATION OF ii. EXCEPTION: "A MINIMUM OF 0.019 INCH (26 GAUGE) STEEL DUCTS DO NOT REQUIRE COMBINATION FIRE/SMOKE DAMPERS WHEN THE DUCT HAVE NO OPENINGS INTO THE CORRIDOR."
5. LINE VOLTAGE DUCT MOUNTED SMOKE DETECTOR PROVIDED AND WIRED UNDER ELECTRICAL OR FIRE & LIFE SAFETY DIVISION OF THE SPECIFICATIONS AND INTERLOCKED WITH THE SITE FIRE ALARM CONTROL PANEL. REFER TO ELECTRICAL AND FIRE/LIFE SAFETY DRAWINGS AND SPECIFICATIONS.

WALL FIRE/SMOKE DAMPER

SCALE NONE | 2

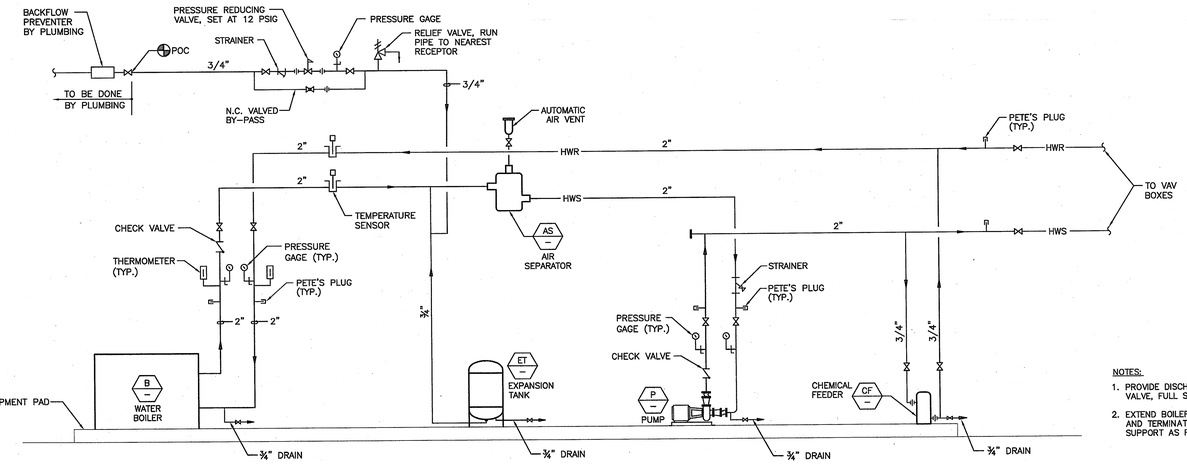

NOTES:

1. PROVIDE DISCHARGE PIPE FROM EACH RELIEF VALVE AND DRAIN VALVE, FULL SIZE, TO CLOSEST ROOF RECEPTOR.
2. EXTEND BOILER FLUE ABOVE ADJACENT PARAPET WALL PER CMC AND TERMINATE WITH APPROVED CAP. PROVIDE BRACKETS AND SUPPORT AS REQUIRED.

HOT WATER HEATING SYSTEM PIPING & FLOW SCHEMATIC

SCALE NONE | 1

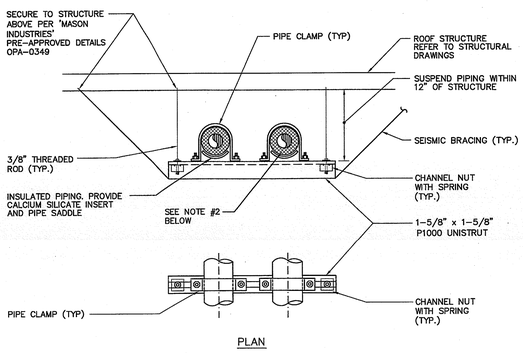

NOTES:

1. ALL PIPE SUPPORT SYSTEMS SHALL BE IN ACCORDANCE WITH THE LATEST EDITION OF SMACNA GUIDELINES FOR SEISMIC RESTRAINTS OF MECHANICAL SYSTEMS.
2. FOR REFRIGERANT LIQUID PIPE, INSULATION SHALL BE OMITTED.

SUSPENDED PIPE DETAIL

SCALE NONE | 6

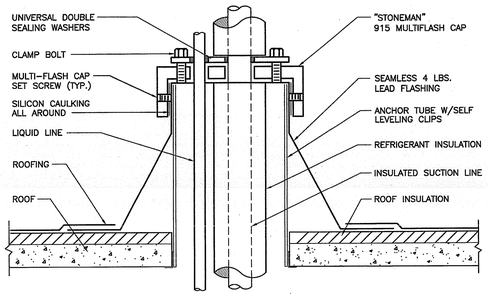

NOTE:

1. INSTALL MULTIFLASH ASSEMBLY PER MAFGRS. INSTRUCTIONS
2. CONTROL & POWER WIRING/CONDUIT TO RUN THRU FLASHING ASSEMBLY.
3. USE "STONEMAN" 910 FUTURE FLASH CAP FOR FUTURE PIPE PENETRATIONS.

REFRIGERANT PIPE THRU ROOF

SCALE NONE | 5

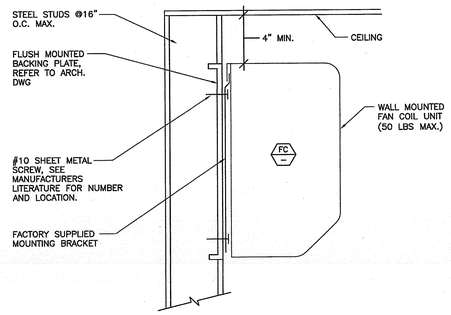

NOTES:

1. MOUNT UNIT AS HIGH AS PRACTICAL ON WALL. SECURE TO STRUCTURE USING FACTORY MOUNTING BRACKET & TEMPLATE WITH ANCHOR BOLTS PER MANUFACTURER'S INSTRUCTIONS

WALL MOUNTED FAN COIL

SCALE NONE | 4

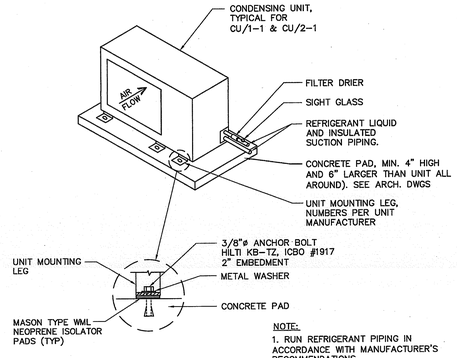

NOTE:

1. RUN REFRIGERANT PIPING IN ACCORDANCE WITH MANUFACTURER'S RECOMMENDATIONS.

CONDENSING UNIT ON CONC.PAD

SCALE NONE | 3

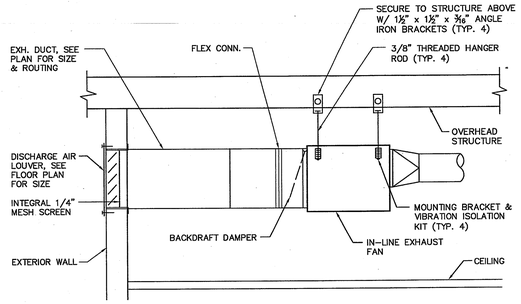

SUSPENDED EXHAUST FAN DETAIL

SCALE NONE | 8

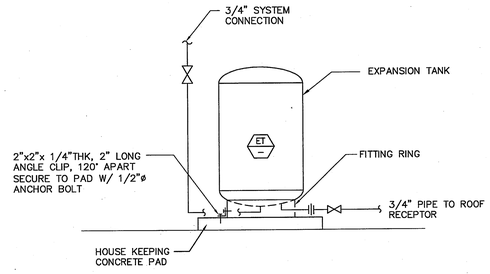

EXPANSION TANK DETAIL

SCALE NONE | 7

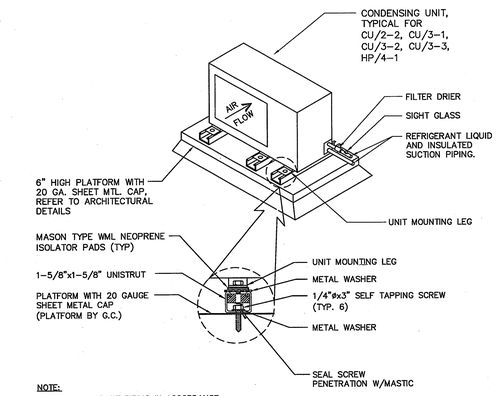

NOTE:

1. RUN REFRIGERANT PIPING IN ACCORDANCE WITH MANUFACTURER'S RECOMMENDATIONS.

CONDENSING UNIT/ HEAT PUMP

SCALE NONE | 10

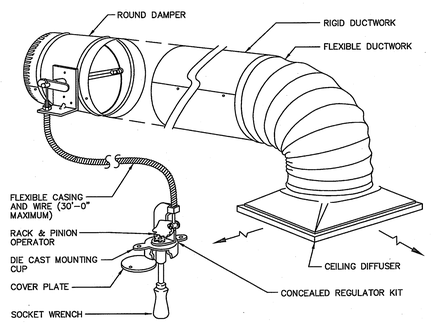

NOTE:

1. COORDINATE EXACT LOCATION OF CEILING MOUNTED CONCEALED REGULATOR WITH ARCHITECT PRIOR TO INSTALLATION.

REMOTE VOLUME DAMPER CONTROL

SCALE NONE | 9

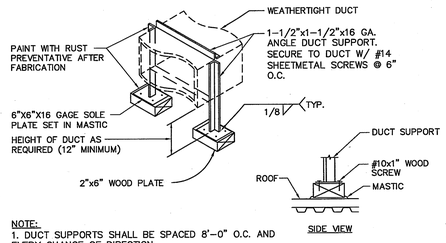

NOTE:

1. DUCT SUPPORTS SHALL BE SPACED 8'–0" O.C. AND EVERY CHANGE OF DIRECTION.

ROOF DUCT SUPPORT

SCALE NONE | 12

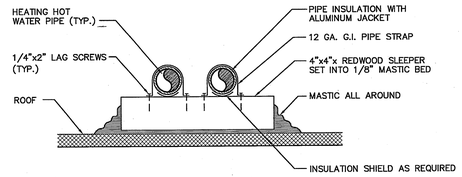

ROOF MTD PIPE SUPPORT

SCALE NONE | 11

County of Orange
OC PUBLIC WORKS
Architecture & Engineering

Sym.	Descrip.	Date	By

Revisions

0742

Consultants

FTA ARCHITECTS
Terence Carlon Dodd, Suite 50
Irvine, CA 92612
TEL: 714-955-5344
FAX: 714-955-5345
Job Number 9-126

Date 1-26-09 | Chkd. | Drawn MC.

A-E Seal

A-E ALEXANDER + HIBBS, AIA, INC.
ALEXANDER + HIBBS, AIA, INC.
Architecture and Planning
1000 N. Anderson St., Suite A
Santa Ana, CA 92701
(714) 953-0369

Date Nov. 26, 2009 | Chkd. | Design

Sht Title MECHANICAL DETAILS
Project COUNTY OF ORANGE HEALTH CARE AGENCY
401 SOUTH TUSTIN STREET
401 SOUTH TUSTIN STREET
ORANGE, CA 92866
PROJ. NO. 100-042-P210-4200

Plan No.
52333-03608

Sheet
M-3.2

0742 COUNTY OF ORANGE HEALTH CARE AGENCY 401 SOUTH TUSTIN STREET