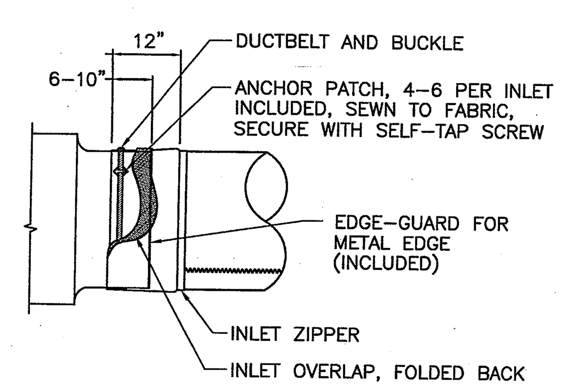

INLET ATTACHMENT DETAIL

SEDONA-XM CONSTRUCTION WITH ZIPPER AND OVERLAP

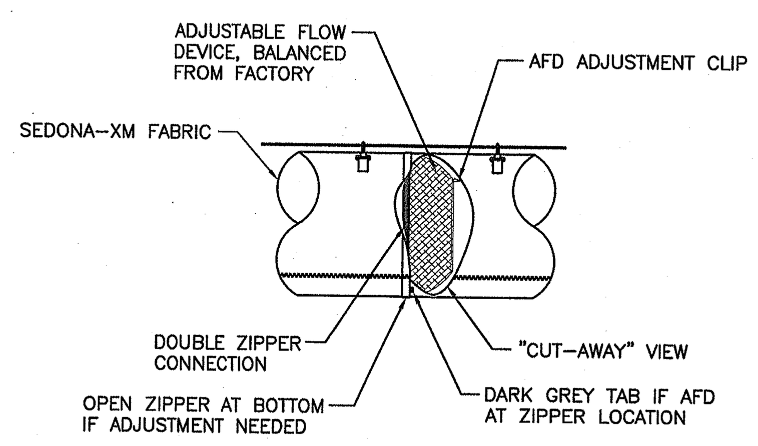

ADJUSTABLE FLOW DEVICE (AFD)

INSTALLED AT ZIPPER LOCATION AT INLET OR AS SPECIFIED IN OTHER LOCAITONS. ZIPPER TO ZIPPER CONNECTION AS SHOWN. EXTERNAL LABEL IDENTIFIES LOCATION.

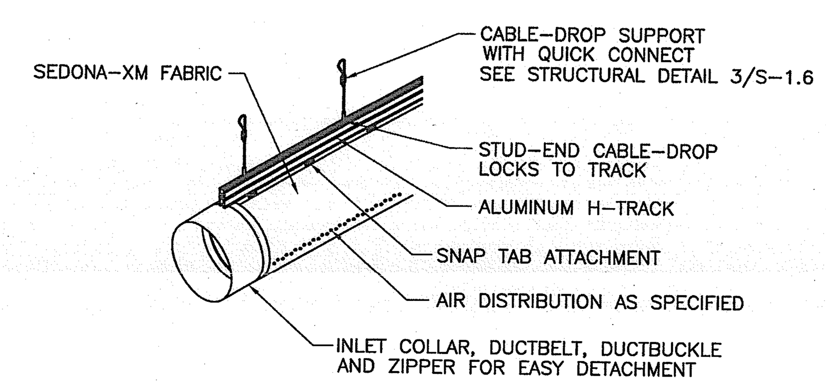

SUSPENSION DETAIL

1 ROW H-TRACK SUSPENSION AT 12 O'CLOCK DETACHABLE TRACKGLIDE CONNECTION.

NOTE: 1. COLOR FABRIC DUCT AND SUPPORTING DEVICE IN WHITE.

FABRIC DUCT (DUCTSOX) DETAILS — SCALE NONE — 7

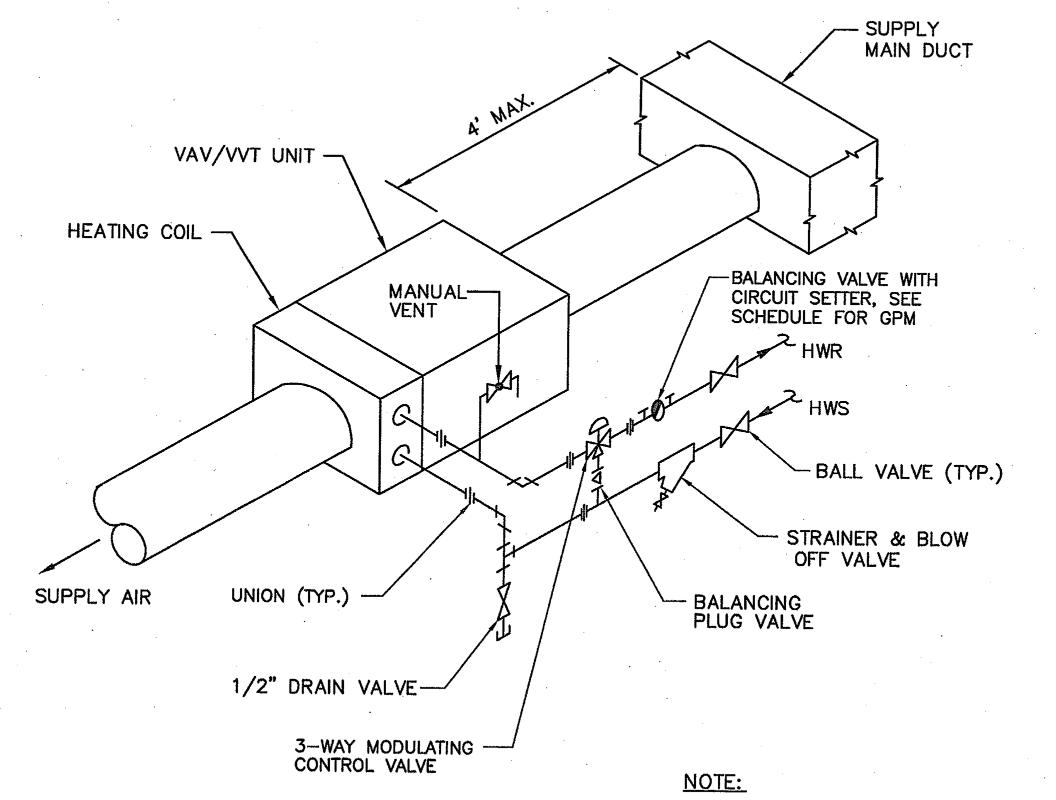

NOTE:

1. VVT BOX BD-1 SHALL NOT HAVE HEATING COIL AND HEATING WATER PIPES.

VAV/VVT BOX W/ HEATING COIL — SCALE NONE — 3

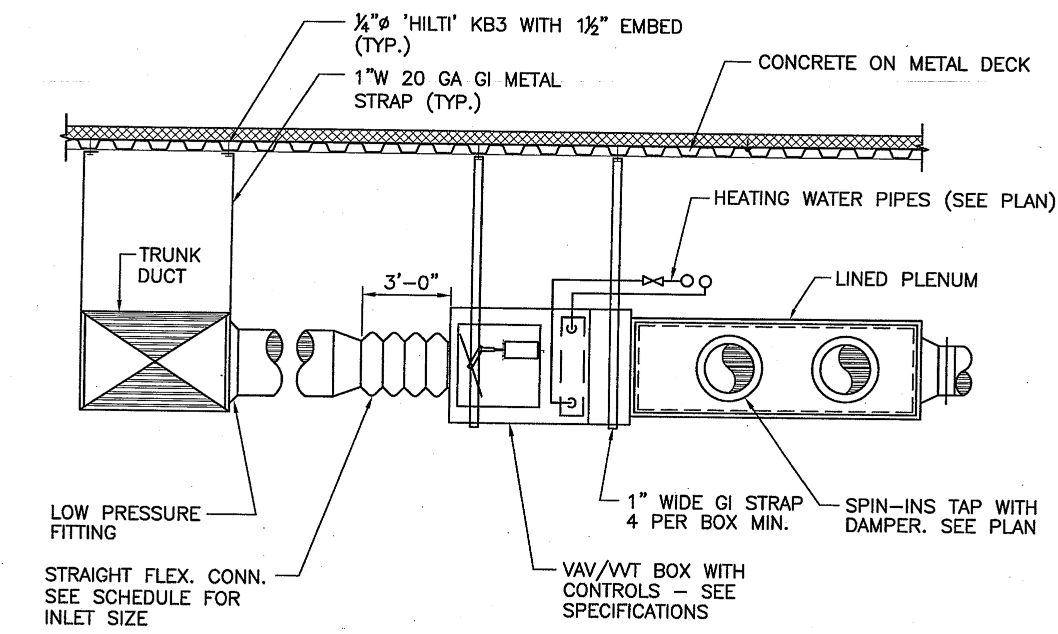

NOTE: WHERE SUPPORTING MEMBER IS BOTTOM CHORD OF STEEL TRUSS OR STEEL BLOCKING:

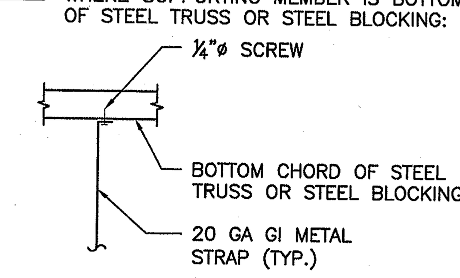

VAV/VVT BOX INSTALLATION — SCALE NONE — 2

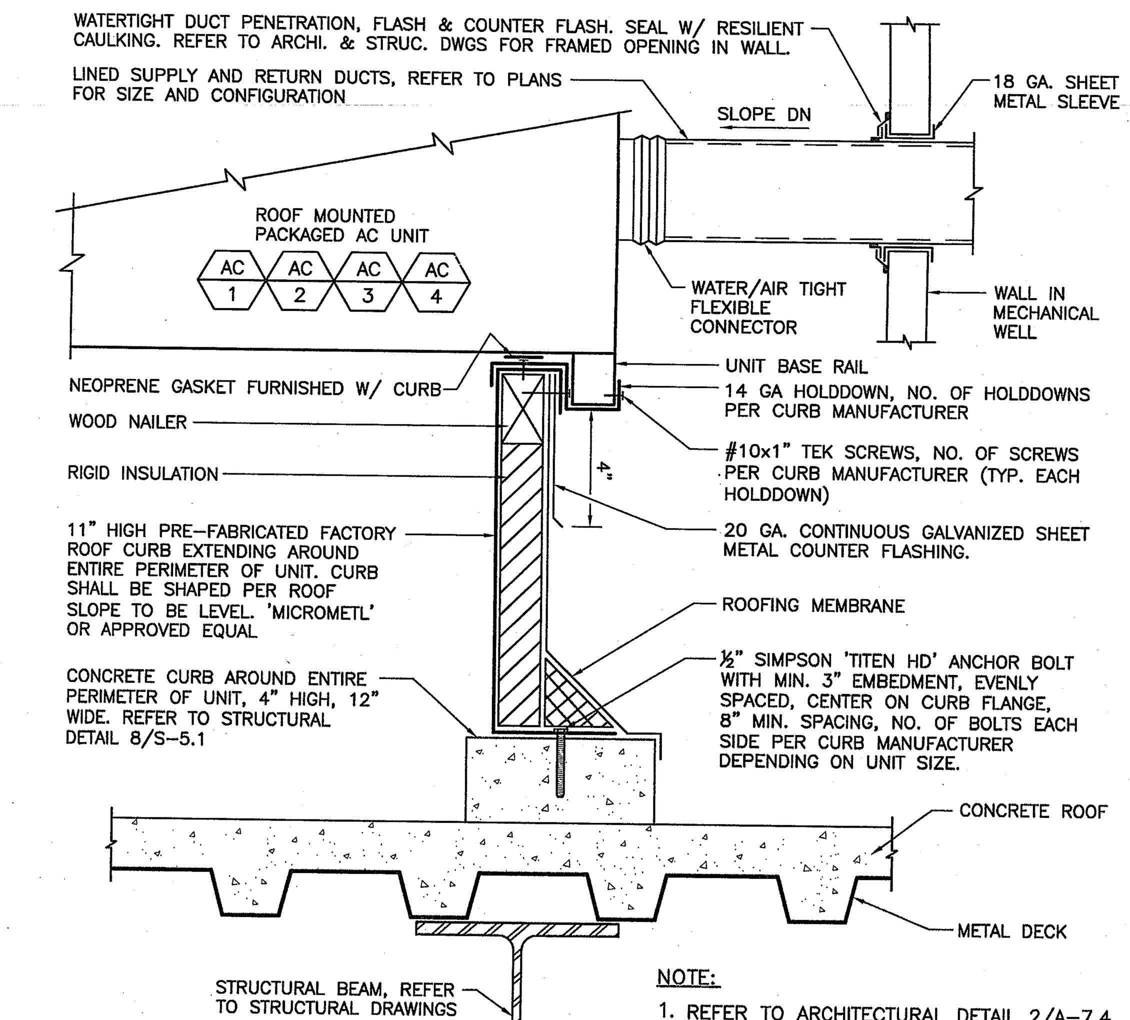

NOTE:

1. REFER TO ARCHITECTURAL DETAIL 2/A–7.4 AND STRUCTURAL DETAIL 8/S–5.1

AC UNIT MOUNTING ON ROOF — SCALE NONE — 1

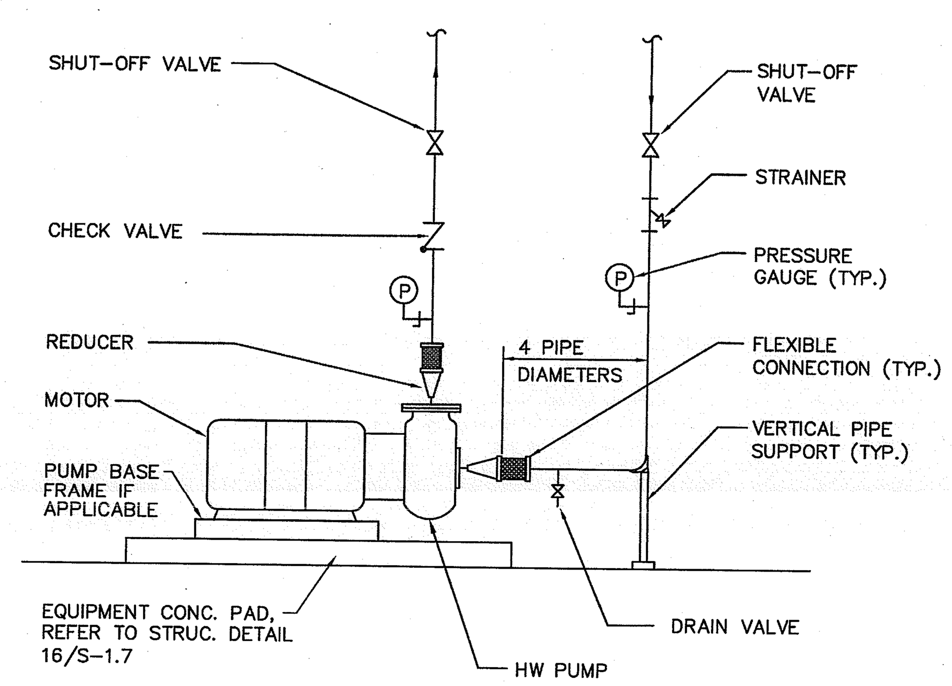

NOTE: 1. REFER TO FLOW DIAGRAM FOR PIPE SIZES.
2. PROVIDE NEOPRE VIBRATION ISOLATOR.

PUMP PIPING DETAIL — SCALE NONE — 6

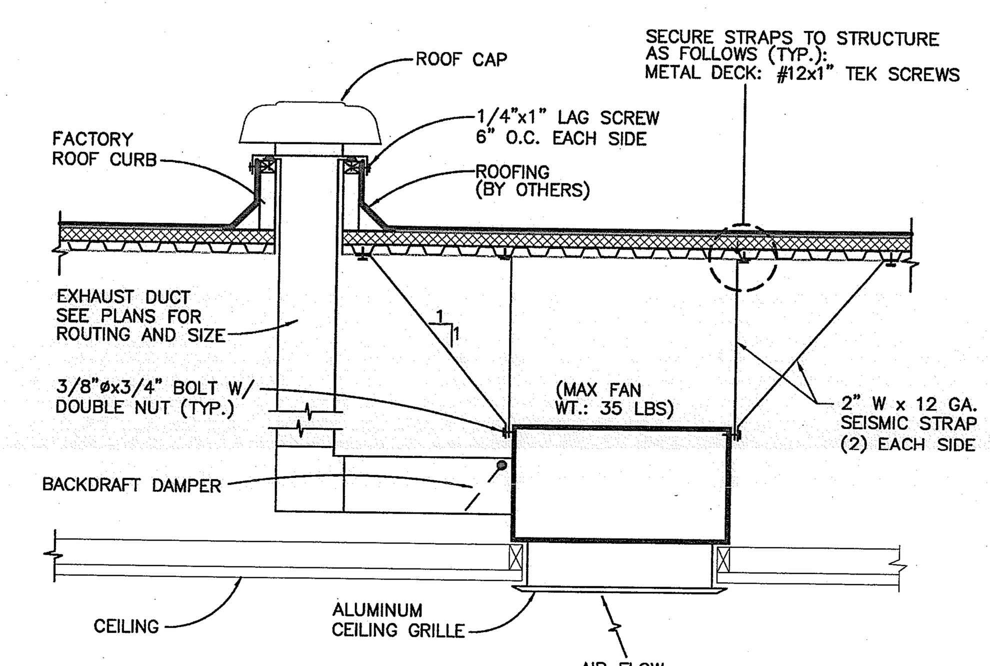

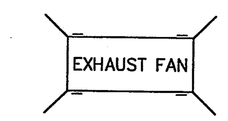

PLAN VIEW

CEILING MOUNTED EXHAUST FAN — SCALE NONE — 5

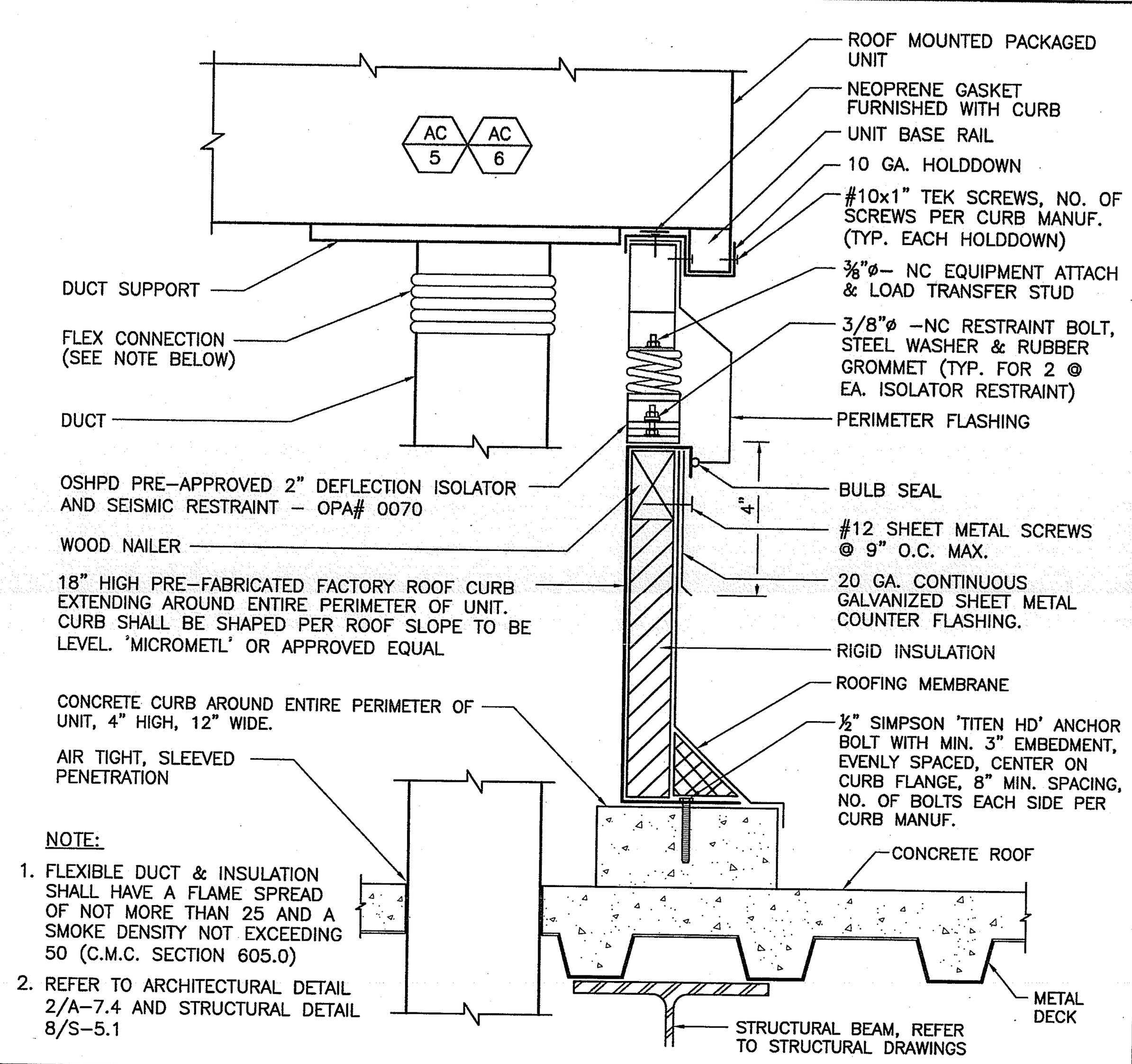

NOTE:

1. FLEXIBLE DUCT & INSULATION SHALL HAVE A FLAME SPREAD OF NOT MORE THAN 25 AND A SMOKE DENSITY NOT EXCEEDING 50 (C.M.C. SECTION 605.0)
2. REFER TO ARCHITECTURAL DETAIL 2/A–7.4 AND STRUCTURAL DETAIL 8/S–5.1

AC UNIT MOUNTING ON ROOF — SCALE NONE — 4

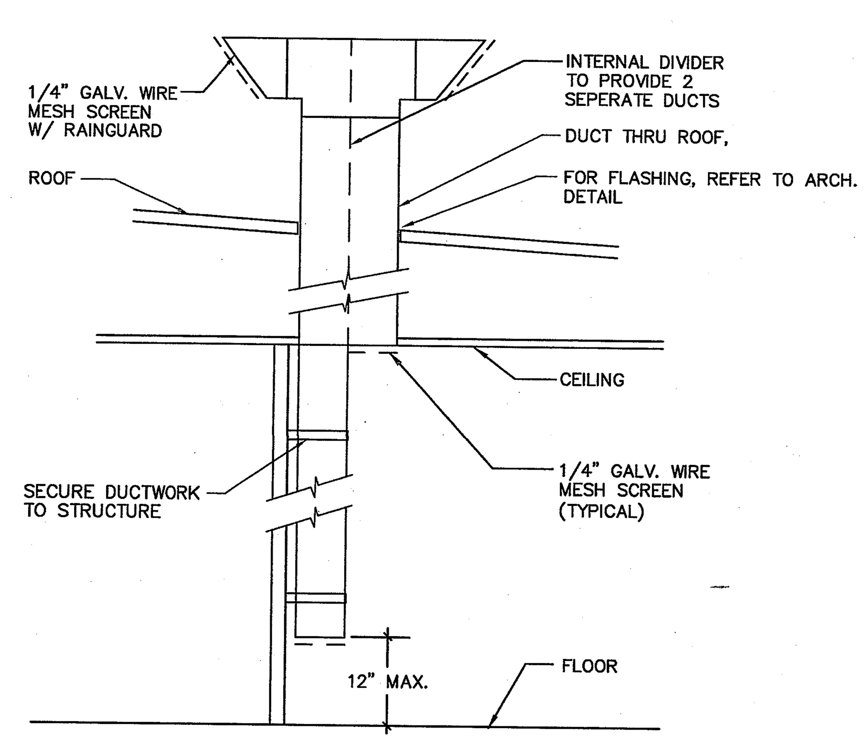

COMBUSTION AIR DUCT SIZE CALCULATION:

BUILDING 2 – ELECTRICAL ROOM 2–128 FOR (1) WATER HEATER
TOTAL GAS INPUT: 120,000 BTUH PER PLUMBING DRAWING

PER CMC SECTION 701.4.1:
(2) DUCTS @ 1 SQ. IN./4000 BTUH INPUT EACH DUCT
120,000/4000 = 30 SQ. IN. EACH MIN.
(2) 8"x4" MIN. DUCTS ARE REQUIRED.

COMBUSTION AIR DUCT — SCALE NONE — 11

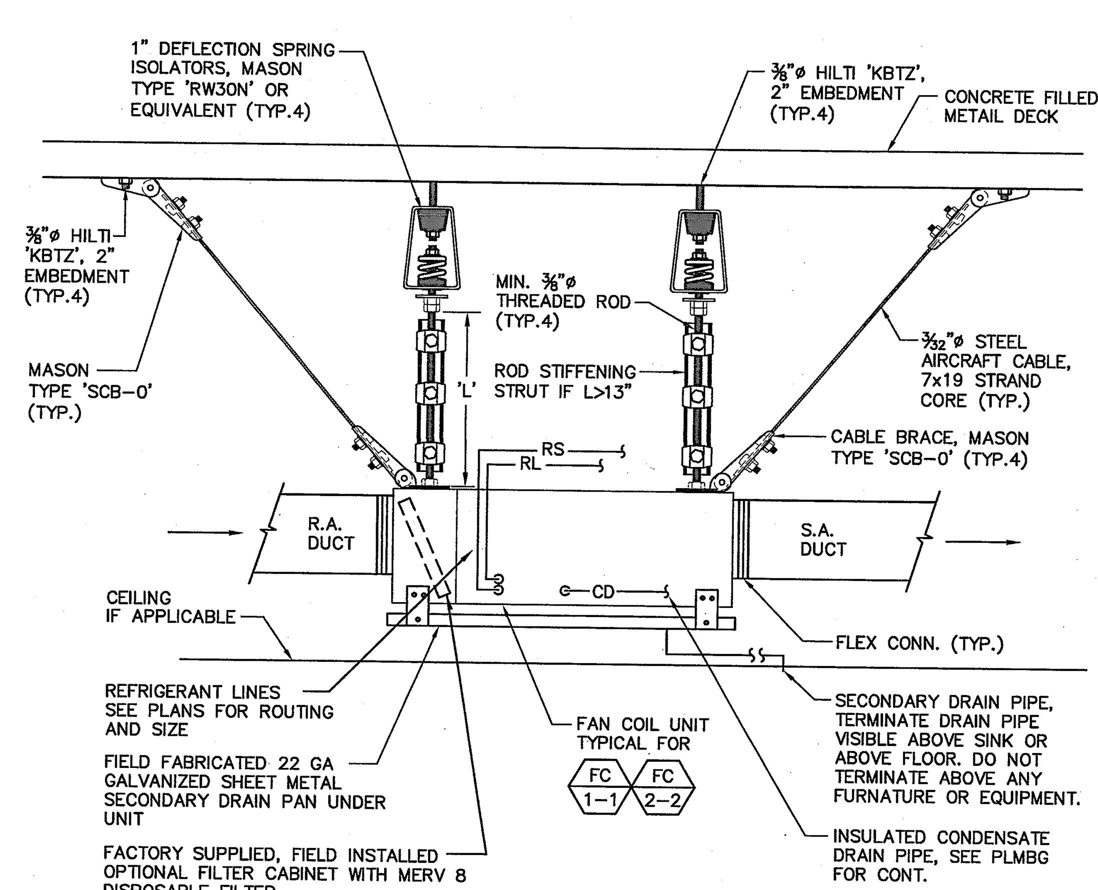

NOTE:

1. MOUNT UNIT AS HIGH AS PRACTICAL UNDER STRUCTURE ABOVE.

FAN COIL UNIT MOUNTING — SCALE NONE — 10

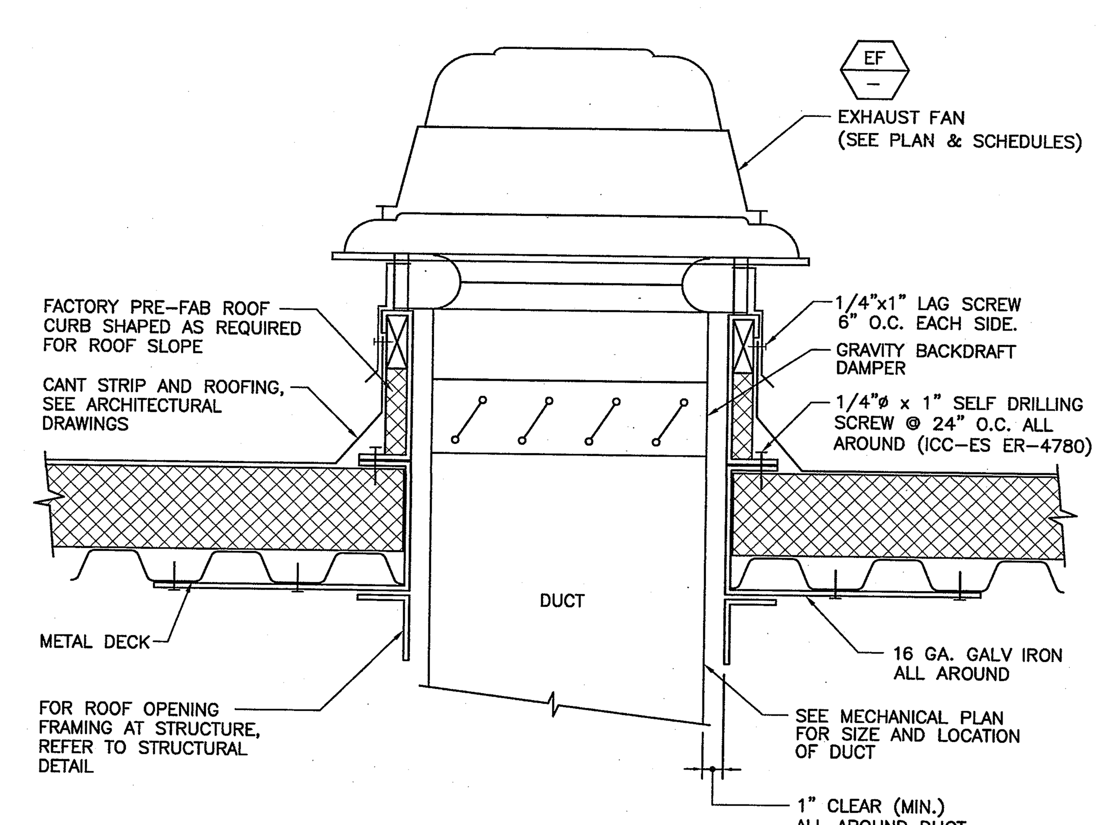

ROOF-MOUNTED EXHAUST FAN — SCALE NONE — 9

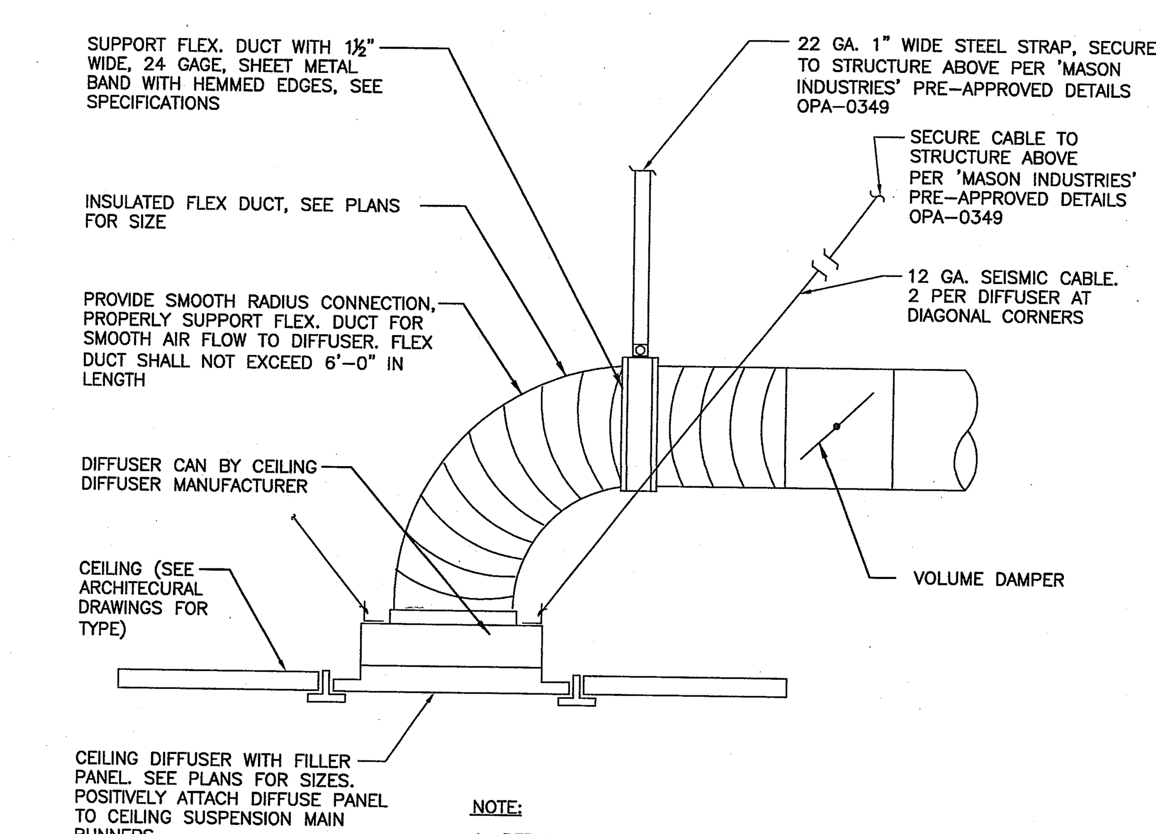

NOTE:

1. RETURN AIR REGISTERS AND EXHAUST AIR GRILLES ARE SIMILAR.
2. DIFFUSER INSTALLATION FOR HARD CEILING IS SIMILAR WITH DIFFERENT BORDER TYPE.
3. FLEXIBLE DUCT & INSULATION SHALL HAVE A FLAME SPREAD OF NOT MORE THAN 25 AND A SMOKE DENSITY NOT EXCEEDING 50 (C.M.C. SECTION 605.0)

CEILING DIFFUSER MOUNTING — SCALE NONE — 8

County of Orange
OC PUBLIC WORKS
Architecture & Engineering

0742 — Revisions

Sym. | Descrip. | Date | By

Consultants: F.T. Andrews, Inc. Consulting Engineers, 17 Peters Canyon Road, Suite 150, Irvine CA 92606, Tel: 714-263-0341, Fax: 714-263-0348, Job Number: 28088 — Drawn ML — Chkd. — Date 11-26-09

A-E Seal

A-E: ALEXANDER + HIBBS, AIA, INC. — Architecture and Planning, 1200 N. Jefferson St., Suite A, Anaheim, California 92807, (714) 630-3586

Design — Chkd. — Date Nov. 26, 2009

Sht Title MECHANICAL DETAILS

Project COUNTY OF ORANGE HEALTH CARE AGENCY 401 SOUTH TUSTIN STREET

401 SOUTH TUSTIN STREET ORANGE, CA 92866

PROJ. NO. 100-042-P210-4200

Plan No. 52333-03608

Sheet M-3.1

0742 COUNTY OF ORANGE HEALTH CARE AGENCY 401 SOUTH TUSTIN STREET