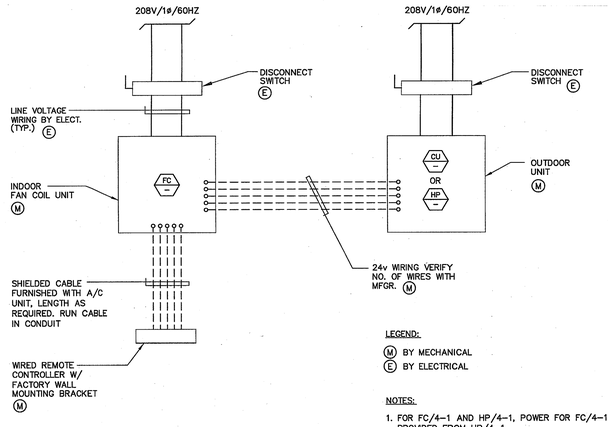

LEGEND:

(M) BY MECHANICAL
(E) BY ELECTRICAL

NOTES:

1. FOR FC/4-1 AND HP/4-1, POWER FOR FC/4-1 IS PROVIDED FROM HP/4-1.
2. PROVIDE WITH FACTORY PROGRAMMABLE T-STAT FOR STAND-ALONE OPERATION.

SPLIT SYSTEM WIRING DIAGRAM

SCALE NONE | 2

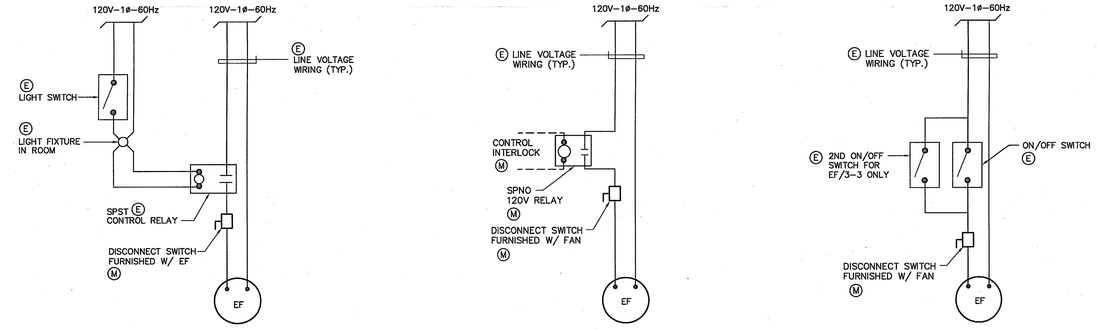

TYPICAL FOR
EF/1-1, EF/1-2, EF/3-1, EF/3-2, EF/3-5, EF/3-6, EF/3-7, EF/3-8, EF/4-2

NOTE:

1. LIGHT SWITCH SHALL BE TIME DELAY (ADJUSTABLE) TYPE.

EF INTERLOCKED W/ LIGHTING

INTERLOCK SCHEDULE:

EF/1-3 & EF/1-4 WITH AC-2
EF/2-1 & EF/2-2 WITH AC-3

EF INTERLOCKED W/ AC UNIT

TYPICAL FOR
EF/3-3, EF/3-4, EF/3-9, EF/4-1

ON/OFF BY DS

EXHAUST FAN WIRING DIAGRAMS

SCALE NONE | 1

NOTES:

1. THE STATIC PRESSURE PICK-UP SHOULD BE LOCATED IN THE SUPPLY AIR DUCT AFTER THE SYSTEM BYPASS DAMPER, BUT BEFORE THE FIRST BRANCH DUCT IN AN AREA OF UNIFORM AIRFLOW.

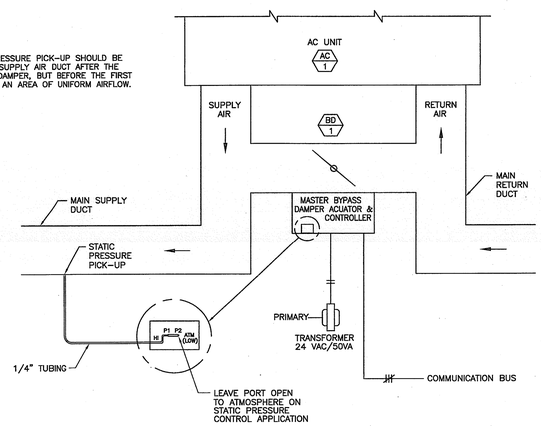

VVT BYPASS CONROL DIAGRAM

SCALE NONE | 4

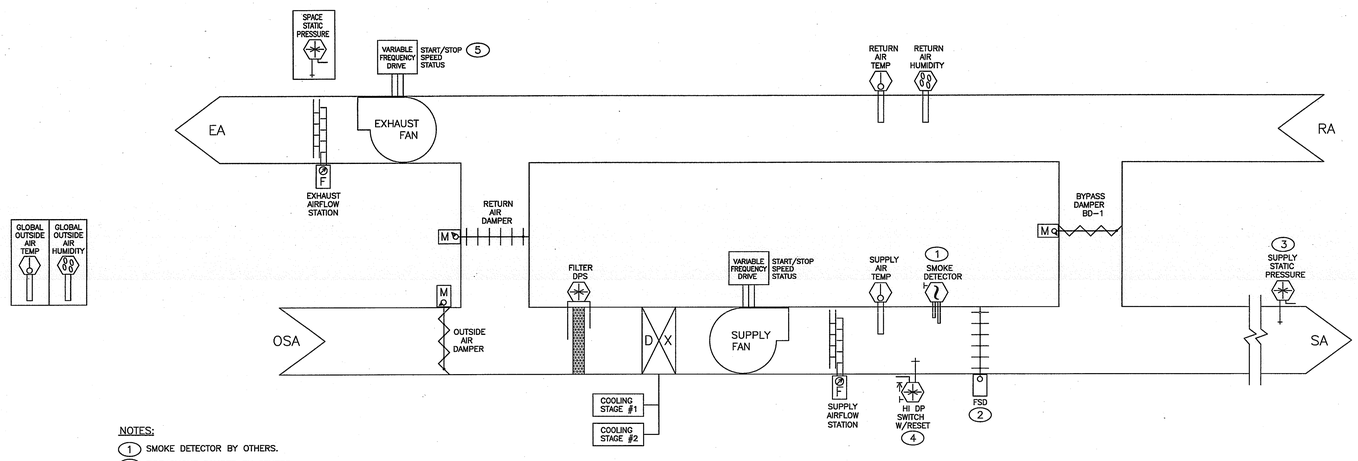

NOTES:

(1) SMOKE DETECTOR BY OTHERS.
(2) FIRE/SMOKE DAMPER BY OTHERS.
(3) LOCATE AFTER BYPASS AND BEFORE FIRST BRANCH DUCT.

FOR AC-1

PACKAGED VVT AC UNIT CONTROL DIAGRAM

SCALE NONE | 3

WIRING SYSTEM NOTES:

1. CONTROL SCHEMATICS ARE FOR SEQUENCE ONLY. REFER TO ELECTRICAL DRAWINGS AND SPECIFICATIONS FOR ALL ELECTRICAL DEVICES REQUIRED.
2. ALL AIR CONDITIONING UNIT AND EQUIPMENT SHALL BE WIRED IN ACCORDANCE TO MANUFACTURER'S RECOMMENDATIONS.
3. ALL BAS LOW VOLTAGE WIRING, INCLUDING FINAL CONNECTIONS TO CONTROL DEVICES AND EQUIPMENT, SHALL BE AS INDICATED ON THE MECHANICAL DRAWINGS OR SPECIFIED IN THE MECHANICAL SECTIONS OF THE SPECIFICATIONS. ALL LOW VOLTAGE WIRING SHALL BE INSTALLED IN CONDUIT UNLESS OTHERWISE PERMITTED TO RUN IN PLENUM IN CONCEALED SPACES. CONDUIT SHALL BE AS SPECIFIED IN THE ELECTRICAL SECTION OF THE SPECIFICATIONS (DIVISION 16). THE BAS LOW VOLTAGE WIRING AND CONDUIT SHALL BE PART OF THE TEMPERATURE CONTROL WORK (DIVISION 15). ALL LINE VOLTAGE WIRING AND CONDUIT SHALL BE PART OF THE ELECTRICAL WORK (DIVISION 16).
4. ALL LINE VOLTAGE WIRING AND ALL CONDUIT FOR LINE VOLTAGE WIRING INCLUDING FINAL CONNECTIONS SHALL BE AS INDICATED ON THE ELECTRICAL DRAWINGS AND/OR SPECIFIED IN THE ELECTRICAL SECTION OF THE SPECIFICATIONS. ALL ELECTRICAL WORK SHALL BE INSTALLED IN ACCORDANCE WITH ALL APPLICABLE CODES AND REGULATIONS OF ALL GOVERNING BODIES HAVING JURISDICTION. THE HIGH VOLTAGE WIRING AND CONDUIT WIRING SHALL BE PART OF THE ELECTRICAL WORK (DIVISION 16).
5. SEE PLANS AND SPECIFICATIONS FOR LOCATION OF CONTROL COMPONENTS OR AS OWNER APPROVAL.
6. REFER TO EQUIPMENT MANUFACTURE FOR PROPER CONTROL WIRING REQUIREMENTS AND INSTALLATION.

GENERAL NOTES:

1. SYSTEM SHALL BE ACCESSIBLE THRU THE WEB (WWW) FOR MONITORING THRU THE USE OF EQUIPMENT MANUFACTURER WEB BASED ACCESS MODULE. PROVIDE 2 COMPUTERS TO OWNER PER BAS CONTROL RISER DIAGRAM.
3. ALL THERMOSTAT SHALL HAVE SET POINT ADJUSTMENT AND SENSOR.
4. LOCATE ONE OUTSIDE AIR TEMPERATURE SENSOR IN SYSTEM.
5. UNITS SHALL BE STARTED BASED ON USER DEFINED OCCUPANCY SCHEDULES. DURING UNOCCUPIED PERIOD, UNITS CAN OPERATE ON OVERRIDE MODE.

EXHAUST FANS SEQUENCE OF OPERATION:

1. EXHAUST FANS SHALL BE ENABLE/DISABLE ACCORDING TO EXHAUST FAN WIRING DIAGRAM, 1/M-4.2.
2. EXHAUST FANS SHALL BE INTERLOCKED TO ENERGY MANAGEMENT SYSTEM PER BAS CONTROL RISER DIAGRAM.

NOTES & SEQUENCE OF OPERATION

SCALE NONE | 6

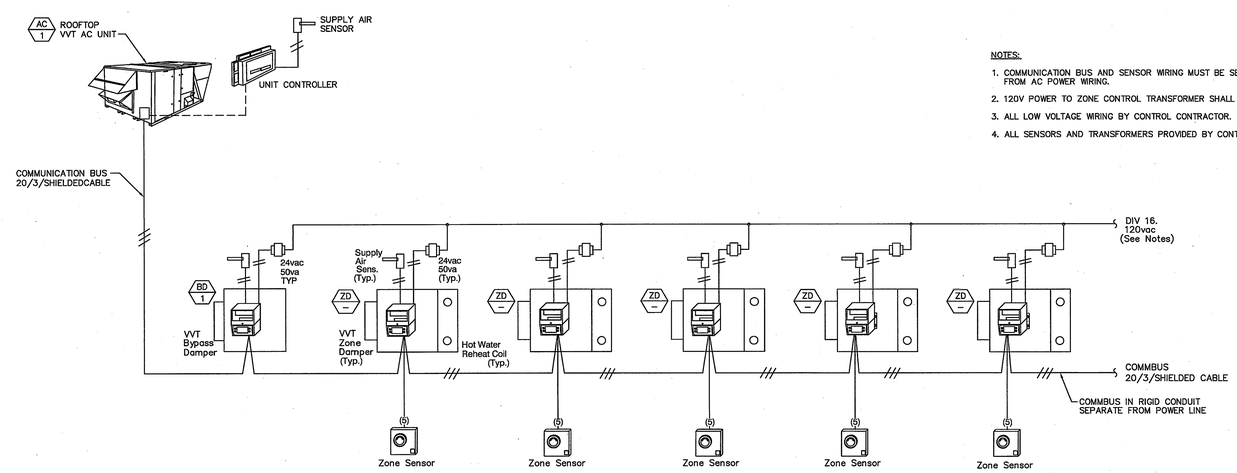

NOTES:

1. COMMUNICATION BUS AND SENSOR WIRING MUST BE SEPARATE FROM AC POWER WIRING.
2. 120V POWER TO ZONE CONTROL TRANSFORMER SHALL BE BY DIV.16
3. ALL LOW VOLTAGE WIRING BY CONTROL CONTRACTOR.
4. ALL SENSORS AND TRANSFORMERS PROVIDED BY CONTROL CONTRACTOR.

VVT ZONING SYSTEM RISER DIAGRAM

SCALE NONE | 5

County of Orange
OC PUBLIC WORKS
Architecture & Engineering

Revisions

Sym.	Descrip.	Date	By
0742			

Consultants

FTA Fire Protection Engineering, Inc.
Fire Protection Engineering
Mechanical Engineering
Electrical Engineering
Plumbing Engineering
Fire Alarm Systems
Lighting Design
Acoustical Engineering
Telecommunications
Security Systems
Audio Visual Systems
Contact: AA DS
Technical Center, Suite 150
9990 Old Olive St. Road
Santee, CA. 92071
Tel: 619-596-0334
Fax: 619-596-0344
www.fta-fpe.com

Drawn M.L. | Chkd. | Date 11-26-09

A-E Seal

A-E ALEXANDER + HIBBS, AIA, INC.
ALEXANDER + HIBBS, AIA, INC.
Architecture and Planning
1010 N. Main Street
Orange, California 92867
(714) 532-1290

Design | Chkd. | Date Nov. 26, 2009

Sht Title MECHANICAL CONTROL DIAGRAMS
Project COUNTY OF ORANGE HEALTH CARE AGENCY
401 SOUTH TUSTIN STREET
401 SOUTH TUSTIN STREET
ORANGE, CA 92866
PROJ. NO. 100-042-P210-4200

Plan No.
52333-03608

Sheet
M-4.2

0742 COUNTY OF ORANGE HEALTH CARE AGENCY 401 SOUTH TUSTIN STREET